XVHS Series Venting Safety Lock-out Valve

XVHS2000-02

XVHS3000-03

Graphic Symbol

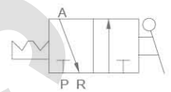

Ordering Code

X	VHS	3000	—	03
XCPC Product	Venting Softing Lock-out Valve Code	Body Size		Port Size

Body Size
2000
3000
4000
5000

Port Size
01:G1/8"
02:G1/4"
03:G3/8"
04:G1/2"
06:G3/4"
10:G1"

Features

It is easy to be maintained because it can realse the pressure of the hypo-pressure side when it is working.It can ensure the safty of the maintenance man bceasue of the lockup functinon.

Overall Dimensions

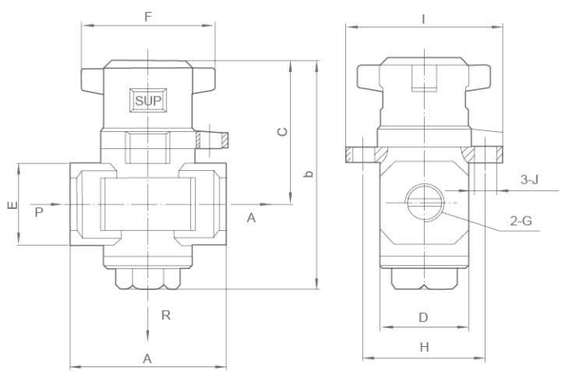

Dimension Sheet

Model	G	Vent size	A	B	C	D	E	F	H	I	J
XVHS2000-01	G1/8	G1/8	40	59	39	28	22	40	32	41	Φ6
XVHS2000-02	G1/4	G1/8	40	59	39	28	22	40	32	41	Φ6
XVHS3000-02	G1/4	G1/4	53	78	49	30	28	45	41.5	53	Φ7.5
XVHS3000-03	G3/8	G1/4	53	78	49	30	28	45	41.5	53	Φ7.5
XVHS4000-03	G3/8	G3/8	70	84	52	36	36	45	41.5	53	Φ7.5
XVHS4000-04	G1/2	G3/8	70	84	52	36	36	45	41.5	53	Φ7.5
XVHS5000-06	G3/4	G1/2	90	136	72	54	48	68	77	90	Φ8.5
XVHS5000-10	G1	G1/2	90	136	72	54	48	68	77	90	Φ8.5

XAV 2000~5000 Series Slow Start Valve

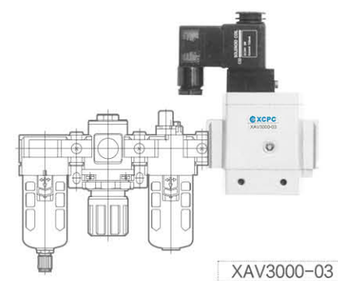
XAV3000-03

Ordering Code

X	AV	□	2000	□	—	02	—	G	AC220V	G
XCPC Product	Solw Start Valove Code	Type of Control	Body Size	Thread Type		Port Size		Optional	Standard Voltage	Plug Mode

Type of Control
Blank: Solenoid
A: Pneumatic

Body Size
2000
3000
4000
5000

Thread Type
Blank:G
R:RC
N:NPT

Port Size
02:G1/4"
03:G3/8"
04:G1/2"
06:G3/4"
10:G1"

Optional
Blank:Without Gauge
G:With Gauge

Standard Voltage
AC110V
AC220V
DC12V
DC24V
Other

Plug Mode
G:Grommet type
D:DIN Type

Features

This is a differential balanced valve automatically opens the air port fully when the downstream pressure iss anout 50% of the upstream pressure.Without a pilot,the upstream air flows downstream through the regulation needle.When an external or pneumatic solenoid signal is generated,the valve opens the main port create full flow.It doesn't relieve the downstream circuit.

Graphic Symbol

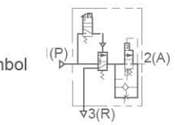

Specifcation

Model		XAV2000-02	XAV3000-03	XAV4000-04	XAV5000-06	XAV5000-10
Port Size		G1/4"	G3/8"	G1/2"	G3/4"	G1"
Effective sectional area (mm^2)	1(P)-2(A)	20	37	61	113	122
	2(A)-3(R)	24	49	76	132	141
Applicable Pressure Range		0.3~1.0MPa				
Ambientand Fluid Temperature		0~60℃				
Coil voltage rating		DC24V、12V、AC220、110V				
Allow voltage fluctuation		Rated voltage-15%~+10%				
Coil insulation class		B level or the same level				
DC/Consumed power DC		3W				
AC/Apparent power AC		Start:5.6VA Keep: 3.4VA				
Port size of cap for pnuematic version		G1/8				
Lowest pressure for pneumatic version		0.2MPa				

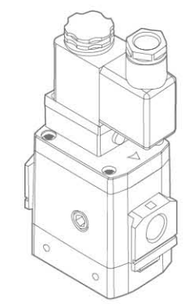

XAMC Serise Exhaust Cleaner

Specifcation

Model	XAMC220-02	HAMC320-02	HAMC320-03	HAMC520-04	HAMC520-06
Port Size	G1/4	G1/4	G3/8	G1/2	G3/4
Effective sectional area(mm2)	12	16	16	55	55
Maximum flow processing(L/min)	200	300	300	1000	1000

Model	XAMC220-02	HAMC320-02	HAMC320-03	HAMC520-04	HAMC520-06
Ambientand Fluid Temperature	5~60℃				
Mufling Effect	More than 35 decibel				
Oil mist recovery effect	More Than 99.9%				
Recycling of oil mist walk way	Female thread hole				
Element one time test pressure	＜0.1MPa				

Instructions

1. Must be installed in a vertical position.
2. The filter element should be changed,When the Inlet pressure is 0.1 MPa or used more than 1 year.
3. No exposure to organic solvents.

Features

1. XAMC exhaust cleaning machine is the new generation of energy conservation and environmental protection products.
2. Used to absorb exhaust noise,recover the waste oil and water, to keep clean.
3. Mainly used to collect the noise and oil mist from the whole system.

XCPC PNEUMATIC